ULINE H-4465, H-4466
H-4467

FLEXIBLE DELINEATOR POST WITH BASE

1-800-295-5510
uline.com

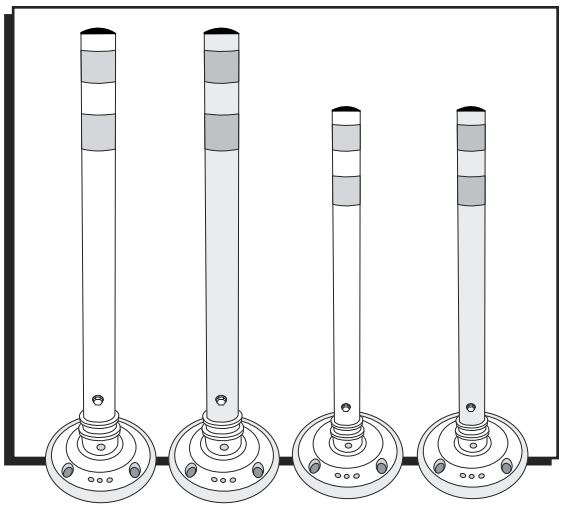

INSTALLATION

1. Clean and dry pavement surfaces prior to installation. Surfaces should be blown clean at a minimum of 90 psi.

NOTE: Minimum installation temperature for pavement is 70°F and 40°F for air. If pavement is less than 70°F, the surface must be warmed with a torch or heat lance.

2. Remove clear liner from top of H-4467 Butyl Pad. Place exposed side of butyl pad onto the pavement and apply pressure.

3. Remove the white release liner to expose the upper adhesive surface.

NOTE: If pavement is less than 70°F, the top surface of the butyl pad must be lightly warmed with a torch or heat lance for approximately 2-5 seconds.

4. Immediately place the black plastic base in the center of the butyl pad. Flow arrows should align with the direction of traffic. Apply pressure. (See Figure 1)

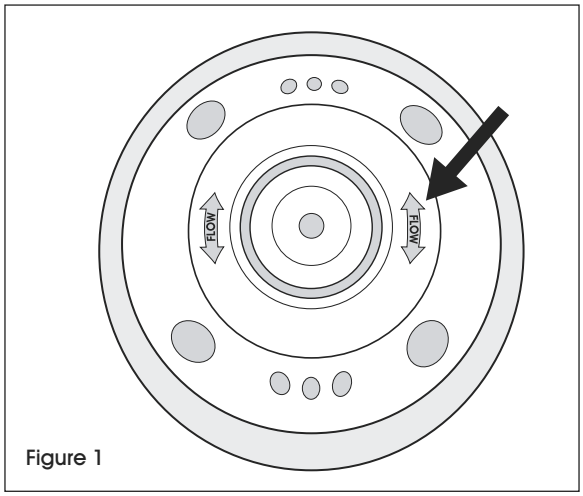

Figure 1

5. Align the hole in the post with the middle hole in the base and insert the post. (See Figure 2)

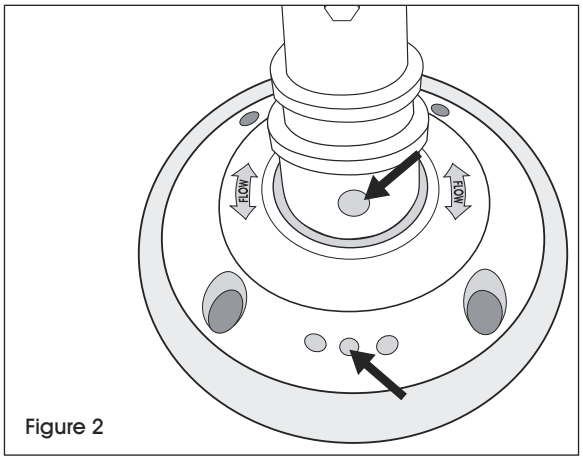

Figure 2

6. Using a hammer or rubber mallet, insert steel pin into the center hole to secure the post to the base. (See Figure 3)

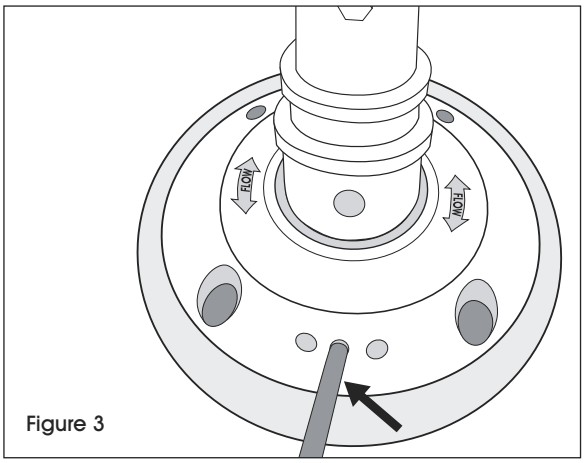

Figure 3

7. Allow up to two hours for butyl pad to fully adhere.